www.bonomini.com

MODEL
Cigno
REF. NO.
8439PP90C0
DESCRIPTION
WC connector
SIZE
Outlet ø 90 mm
FINISH
White polypropylene (PP)

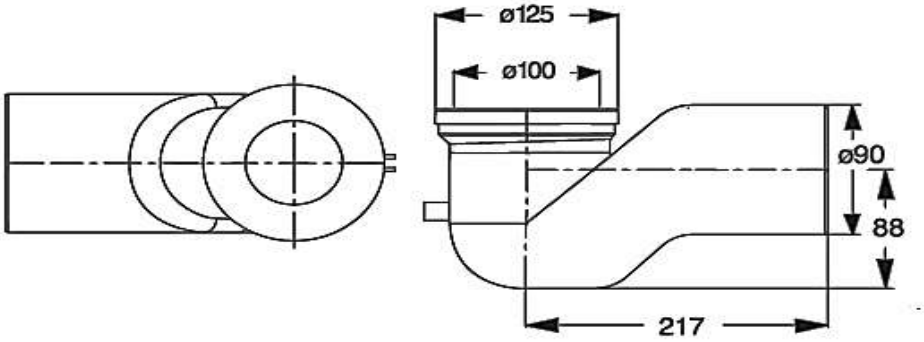

Cigno