www.gl-gaboliluigi.it
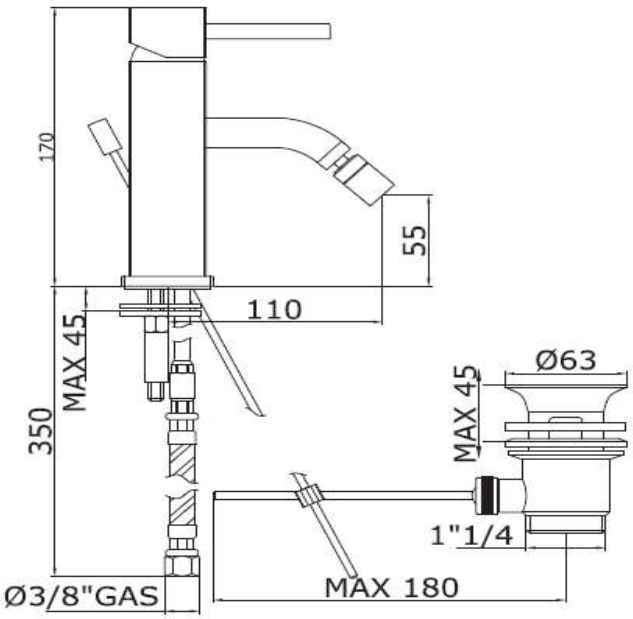
MODEL
Jumpy
REF. NO.
Q40CR
DESCRIPTION
Single lever bidet mixer with pop-up waste set 1 1/4”
FINISH
Brass Chrome Plated