www.teoremaonline.com
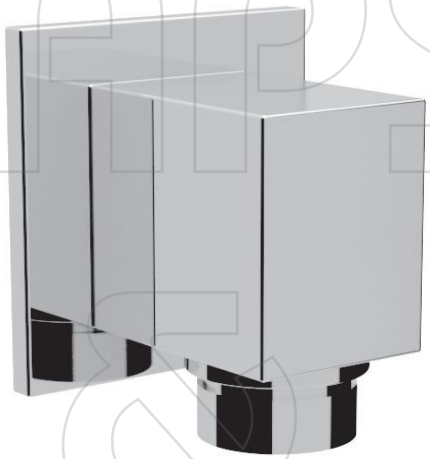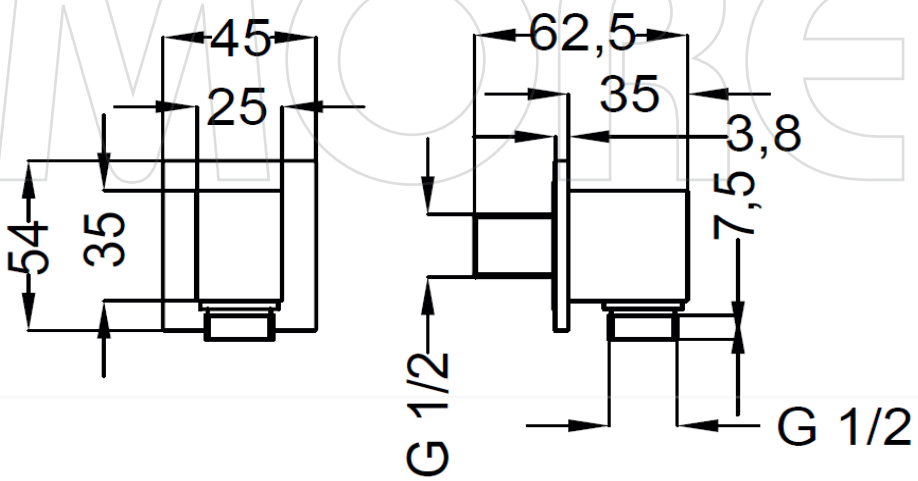
MODEL
Square
REF. NO.
01827_11
DESCRIPTION
SQUARE Water Outlet
SIZE
1/2 x 1/2
FINISH
Brass Chrome Plated