MODEL
X-tre
REF. NO.
1909212
DESCRIPTION
Washbasin with taphole
700 x 470 mm
with overflow hole
FINISH
Matt White

MATT
WHITE
FINISH

To be supplied with :

Screws for basin
Ref. F003
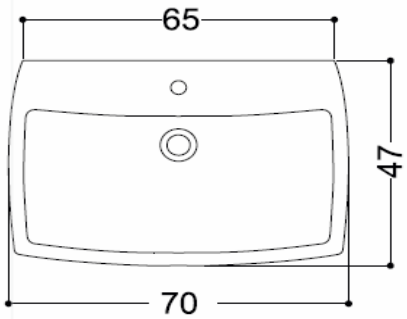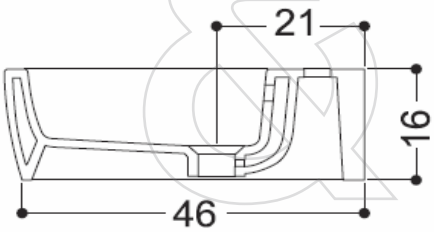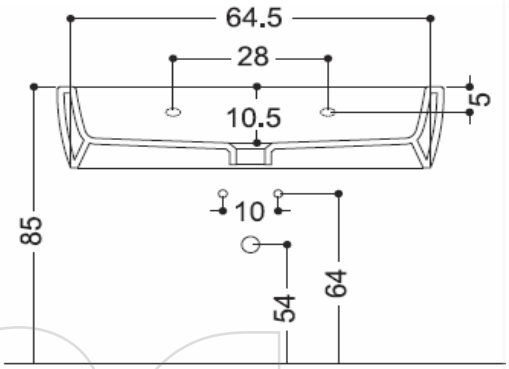
Mixer & fittings not included