MODEL
Glomp

REF. NO.
0201412

DESCRIPTION
Washdown WC, floorstanding
back-to-wall, NO RIM
horizontal or vertical outlet,
Ref. 0201412
Seat and cover (slim),
soft-close with quickmetal
hinges
Ref. 319112

FINISH
Matt White
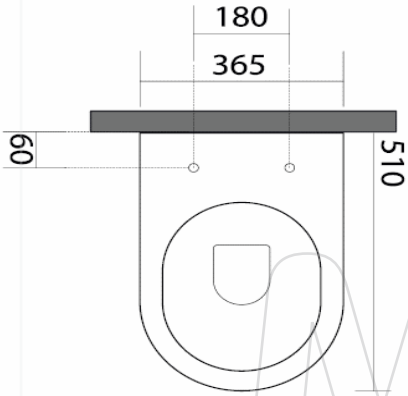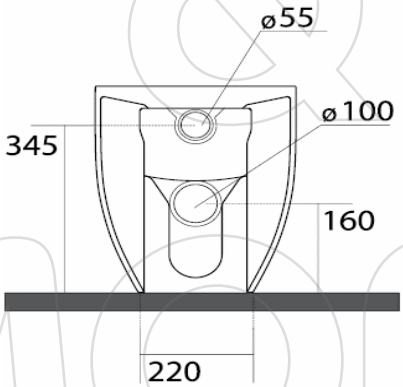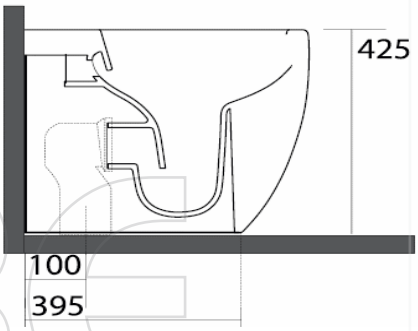
MATT
WHITE
FINISH