www.neroceramica.com

MODEL

Amica

REF. NO.

BAMIS

DESCRIPTION

Bidet, wall hung
with taphole
with overflow hole

FINISH

White

Fittings not included

Recommended Accessories :

Fixing screws Ref. FVBS

Fixing brackets Ref. SFS

Ref. FVBS

Ref. SFS

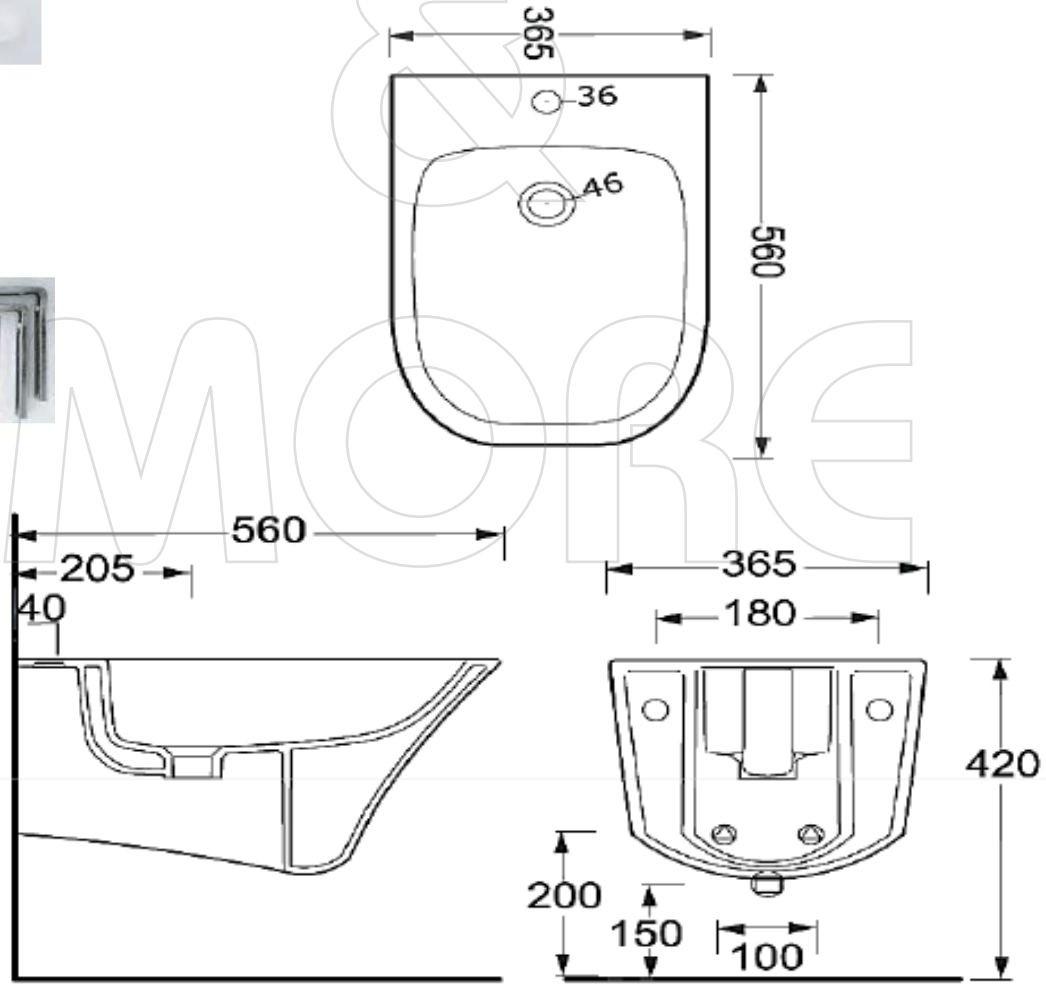

TAPS & MORE
www.tapsmore.com
Bathroom, Kitchen & Plumbing Solutions