www.inda.net
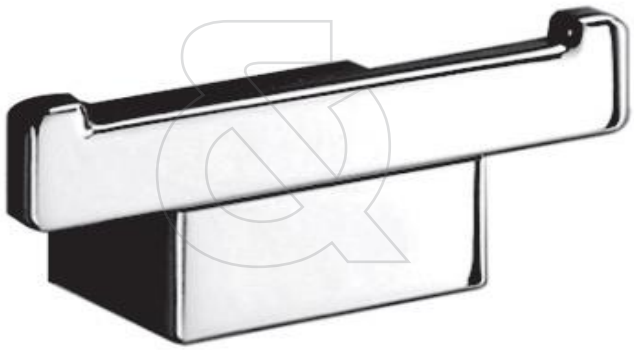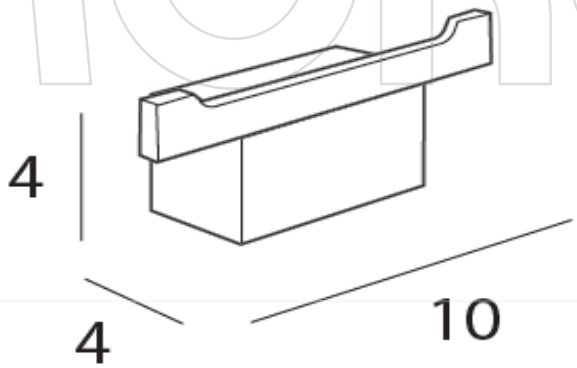
MODEL
Logic
REF. NO.
A33200CR
DESCRIPTION
Double Robe Hook
FINISH
Brass Chrome Plated