www.hueppe.com

MODEL
X1

REF. NO.
WALK-IN 1000 PANEL 900 SET1600

DESCRIPTION
Walk-in Panel (main) 6 mm 1000 x 2000 mm
+ Walk-in Panel (side) 6 mm 900 x 2000 mm
+ acrylic rectangular shower tray 1600 x 900 mm & matching waste set

GLASS TYPE
Clear Tempered

PROFILE COLOR
High-gloss Silver

Glass diagonal stabilizer

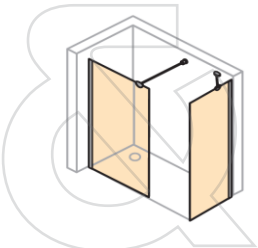
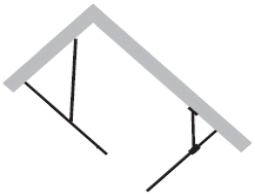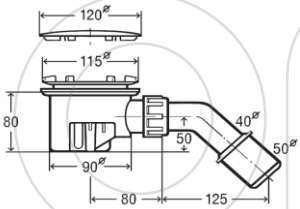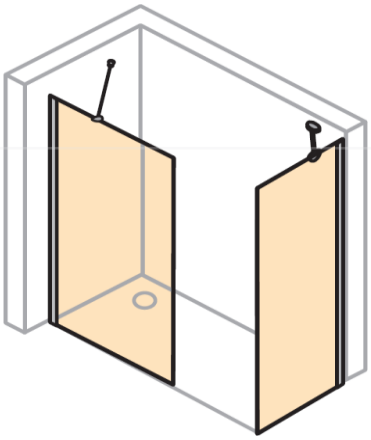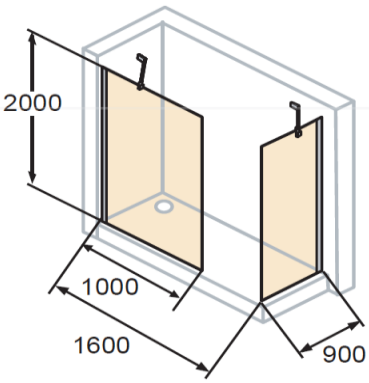
Walk-in Solutions 1000 mm