BLANCO

www.blanco-germany.com

MODEL
Naya XL 9

REF. NO.
521911

SIZE
860 x 510 mm

DESCRIPTION
Silgranit kitchen sink 1 bowl, includes waste fitting with space-saving pipe & 3 ½" basket strainer

FINISH
Nutmeg
Silgranit™ PuraDur™

Cabinet size 90 cm

Bowl depth: 220 mm
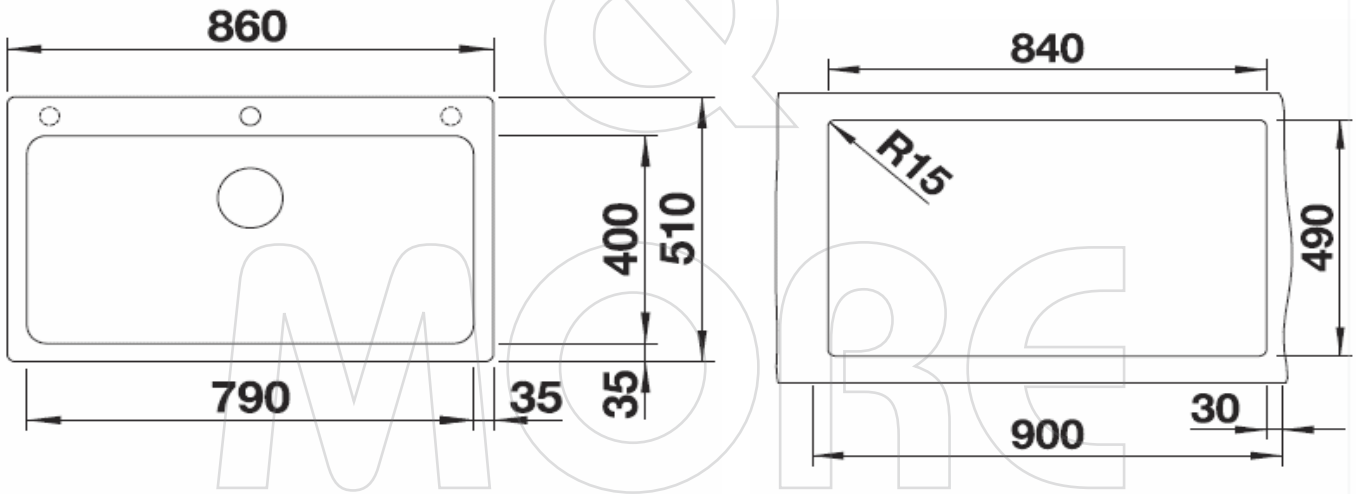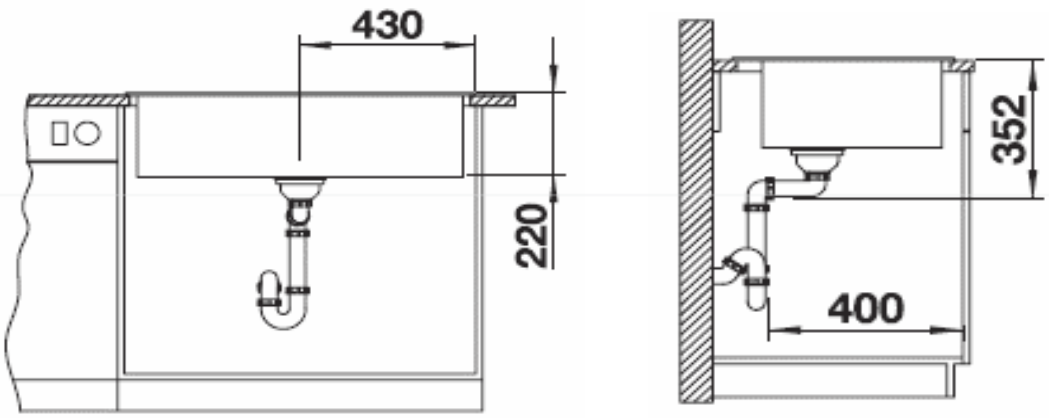
= Pre-drilled holes for knock-out at site