MODEL
Decus

REF. NO.
8510001

DESCRIPTION
Lay-on washbasin
500 x 350 mm
without overflow hole

FINISH
Glossy White
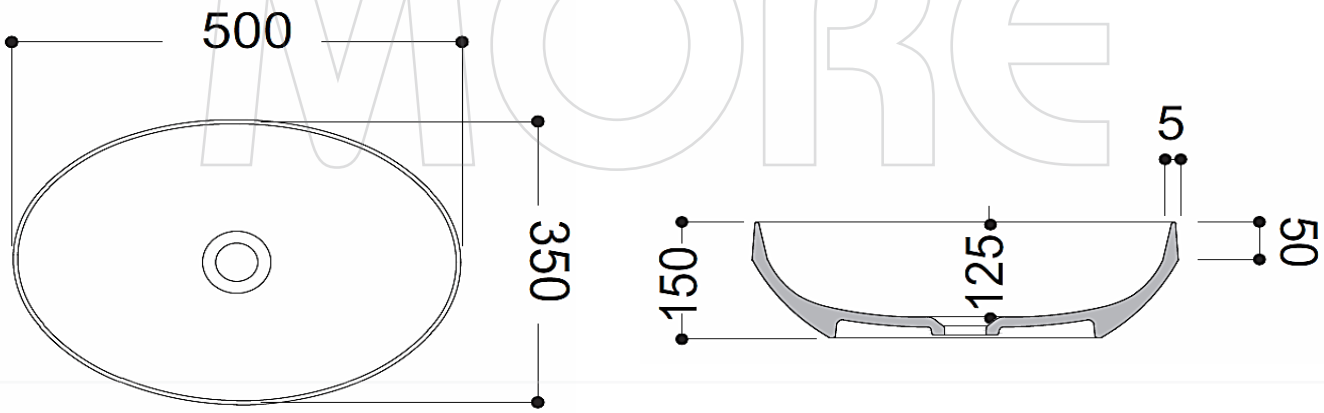
GLOSSY WHITE FINISH