AXA

www.axaone.it

MODEL

Cosa

REF. NO.

8641012

DESCRIPTION

Lay-on washbasin

1000 x 450 mm

without overflow hole

FINISH

Matt White

MATT WHITE FINISH

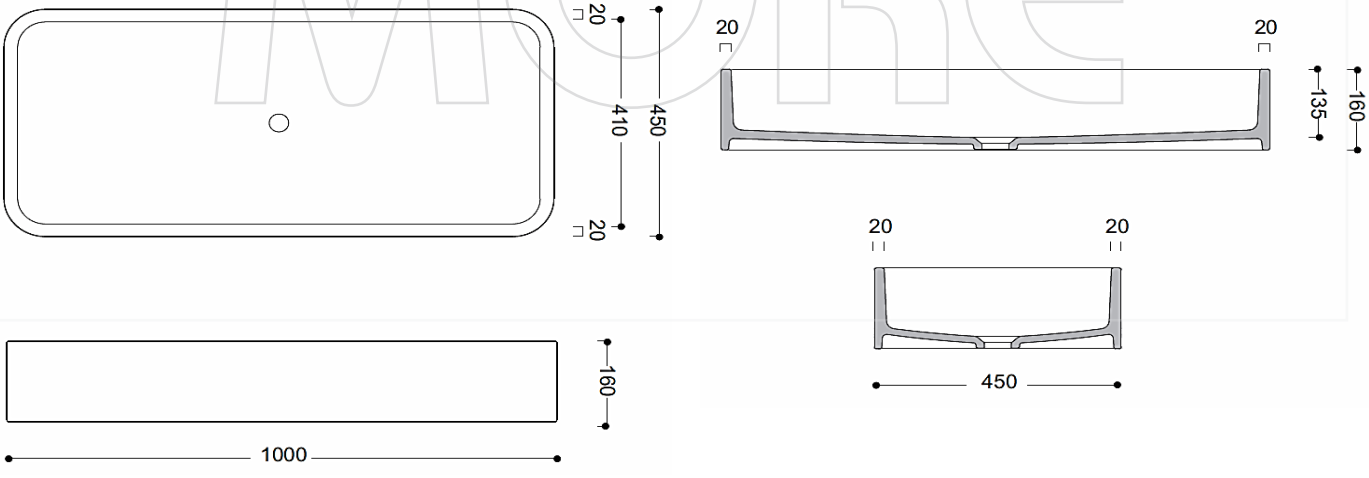

TAPS & MORE
www.tapsmore.com
Bathroom, Kitchen & Plumbing Solutions