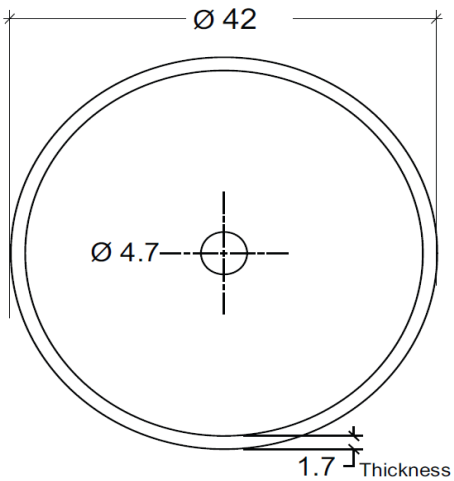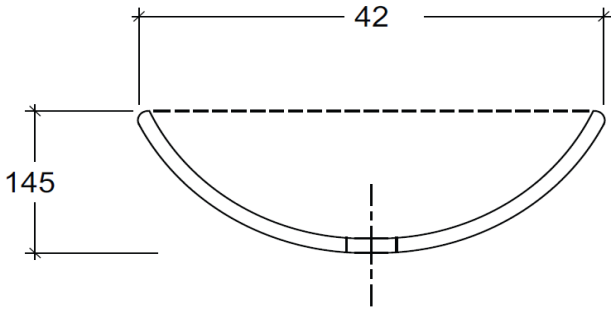MODEL
Orange
REF. NO.
GW800OR
DESCRIPTION
Lay-on washbasin without overflow hole
SIZE
420 x 420 x 145 mm
FINISH
Glass