BATHROOM MIXER

www.kaja-armaturen.de

MODEL

Loft

REF. NO.

61017-W

DESCRIPTION

Single lever washbasin mixer without waste set
NOTE : Please order clic clac waste set separately

FINISH
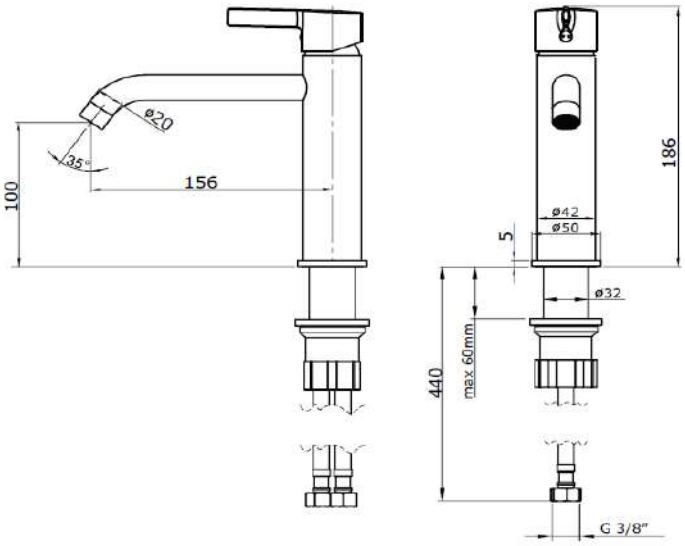
Matt White