**MODEL**

Art

**REF. NO.**

ART1537111-418

**DESCRIPTION**

Shower Tower Set
consisting of :
shower column with diverter,
round shower head Ø 250 mm
ABS chrome plated hand
shower
CP PVC flexible shower hose
1500 mm
shower mixer w/ side lever

**FINISH**
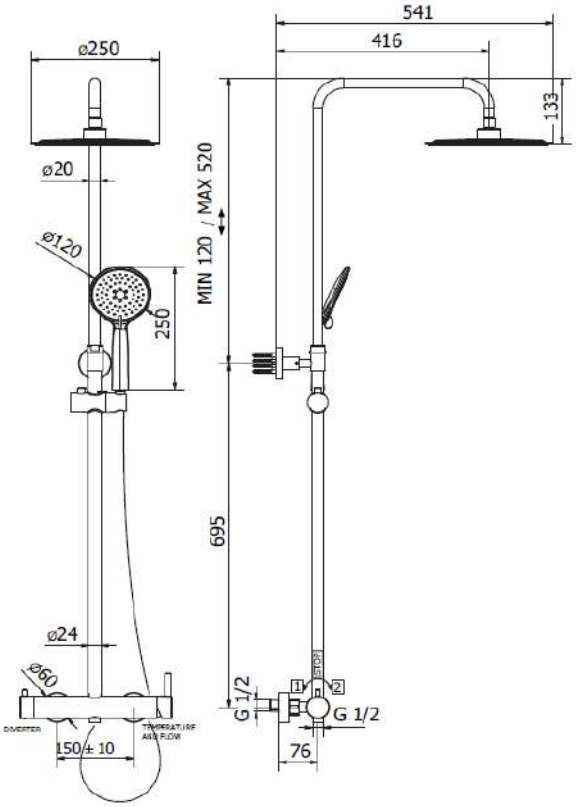
Brass Chrome Plated /
ABS Chrome Plated