MODEL

Art

REF. NO.

ART15377E0-418

DESCRIPTION

Shower Tower Set consisting of:
shower column with
diverter, round shower head Ø
250 mm, brass
brushed nickel hand shower,
brushed nickel PVC
flexible shower hose 1500 mm,
shower mixer w/
side lever

FINISH
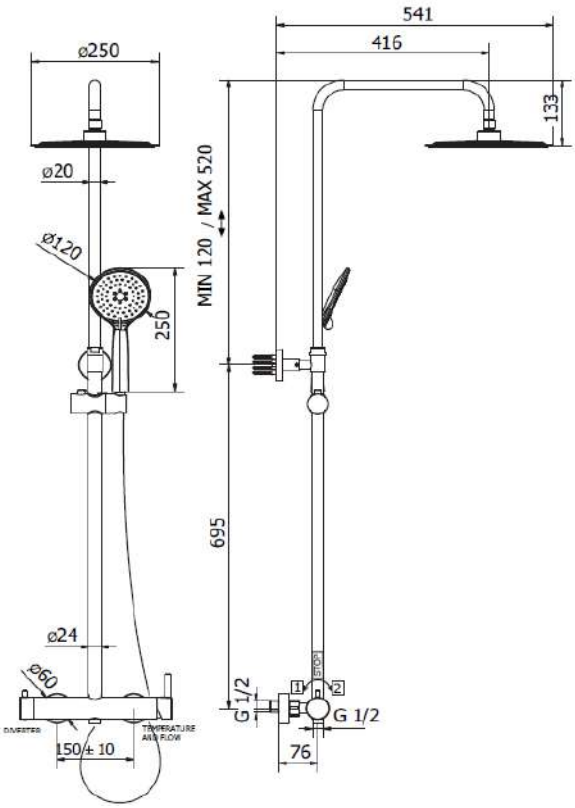
Brushed Nickel