LAUFEN

www.laufen.com
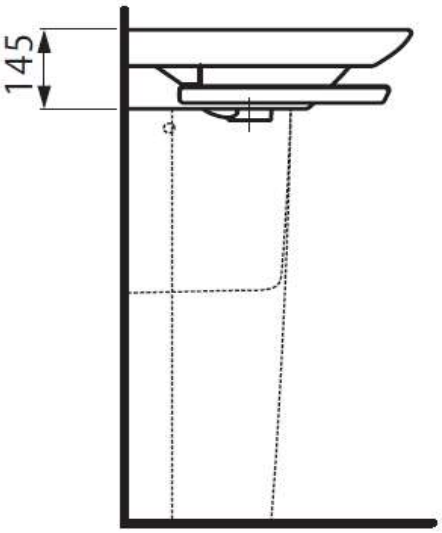
MODEL
Palace
REF. NO.
8.1970.0.000.000.1
DESCRIPTION
Full-pedestal for Washbasin
art. no.8.1070.4.000.104.1
FINISH
White